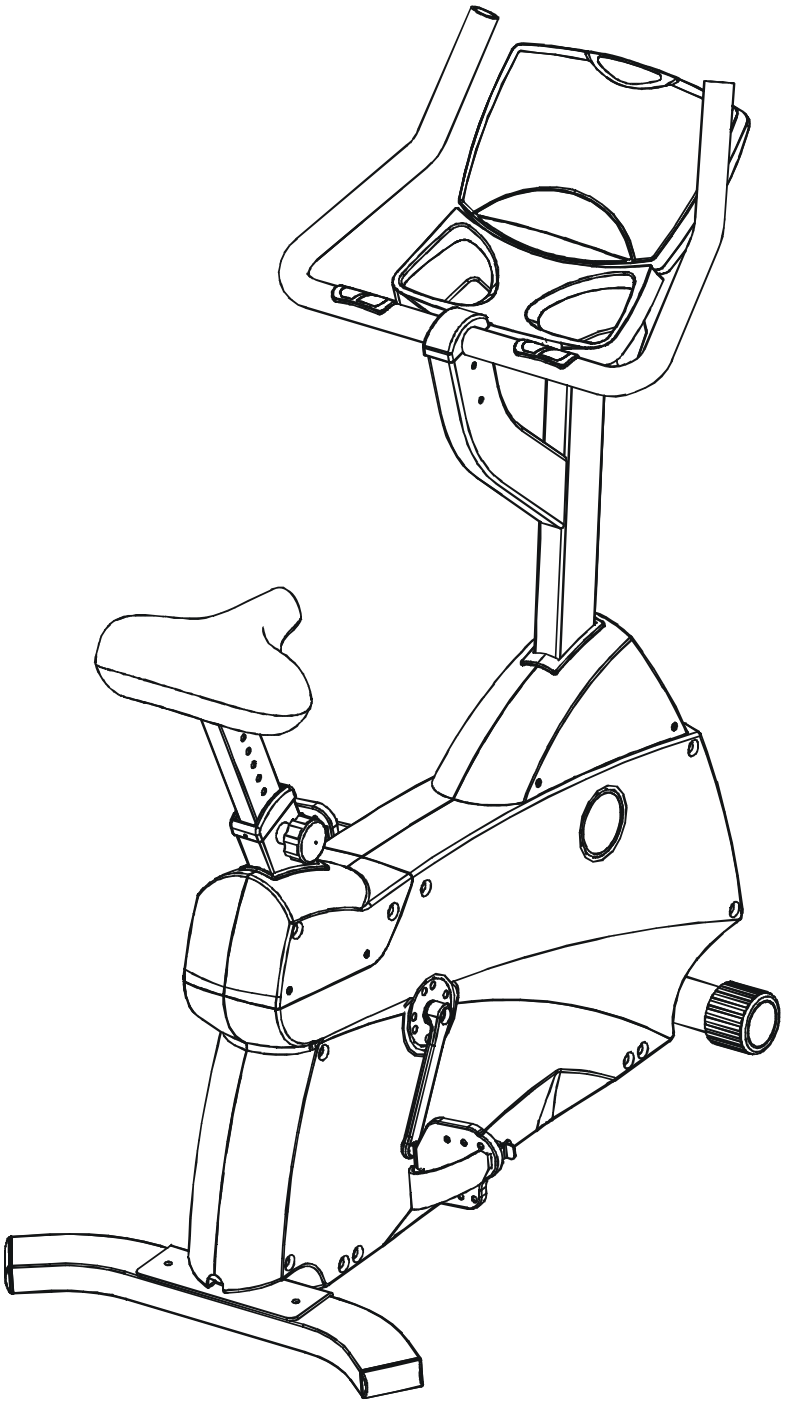

Example of a starting Serial # UT8060210000001			
UT8	06	0210	000001
Model #	Plant #	Year/month	Serial Number

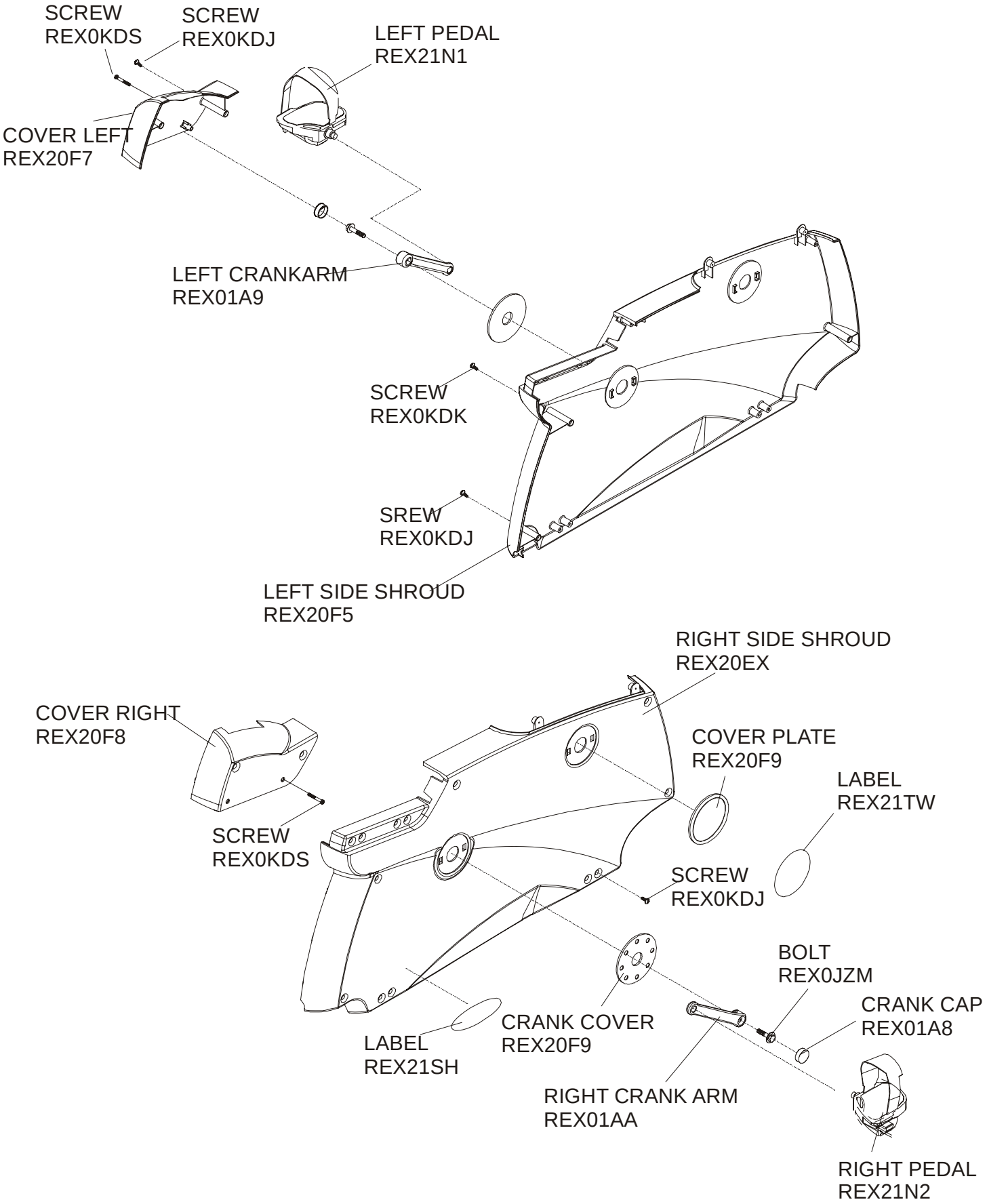
SCREW
REX0KDS
SCREW
REX0KDJ
LEFT PEDAL
REX21N1
COVER LEFT
REX20F7
LEFT CRANKARM
REX01A9
SCREW
REX0KDK
SREW
REX0KDJ
LEFT SIDE SHROUD
REX20F5
RIGHT SIDE SHROUD
REX20EX
COVER RIGHT
REX20F8
COVER PLATE
REX20F9
LABEL
REX21TW
SCREW
REX0KDS
SCREW
REX0KDJ
BOLT
REX0JZM
CRANK CAP
REX01A8
CRANK COVER
REX20F9
LABEL
REX21SH
RIGHT CRANK ARM
REX01AA
RIGHT PEDAL
REX21N2

CONSOLE ASSEMBLY (ENG/ENG)
REX22D9

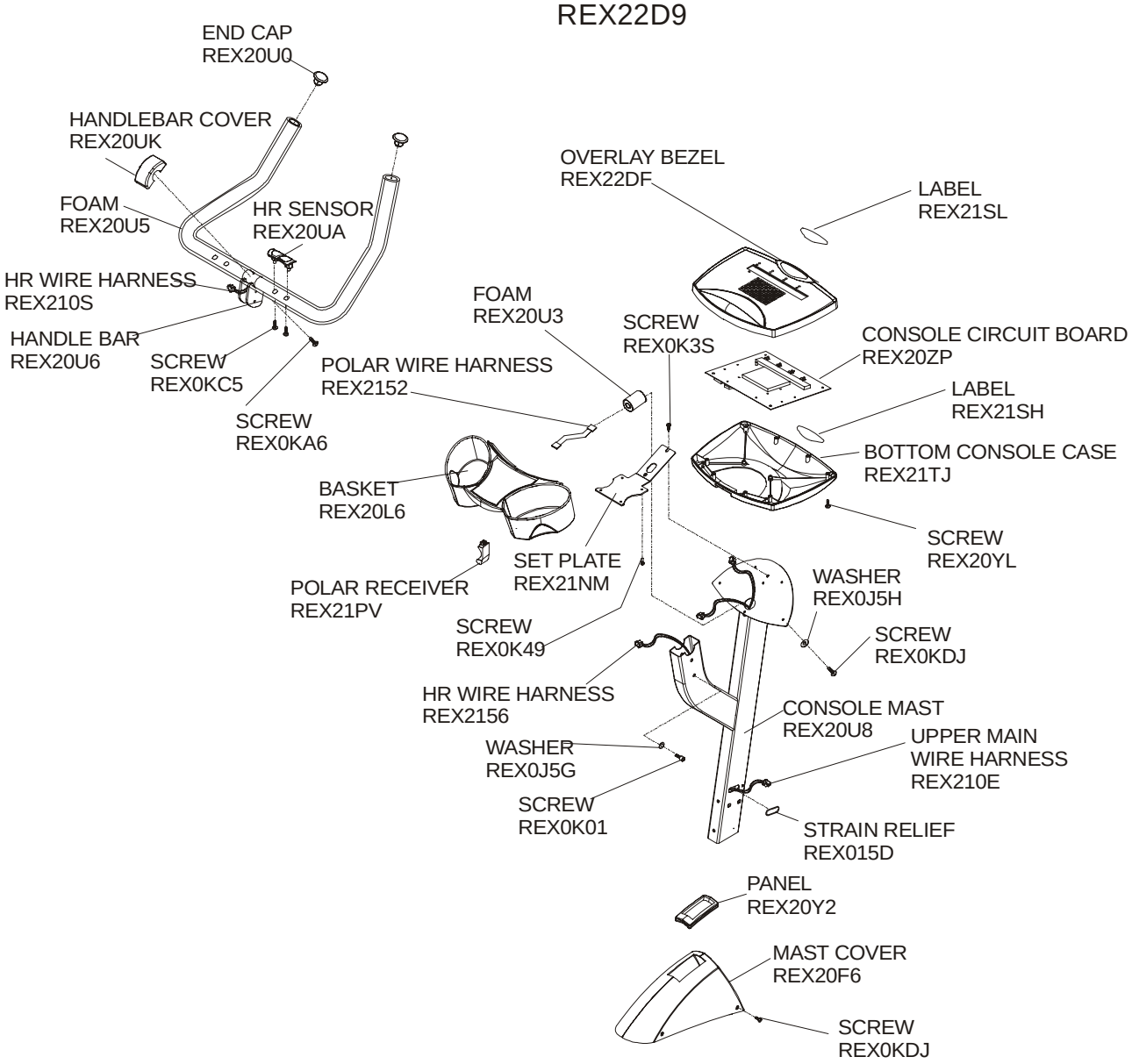

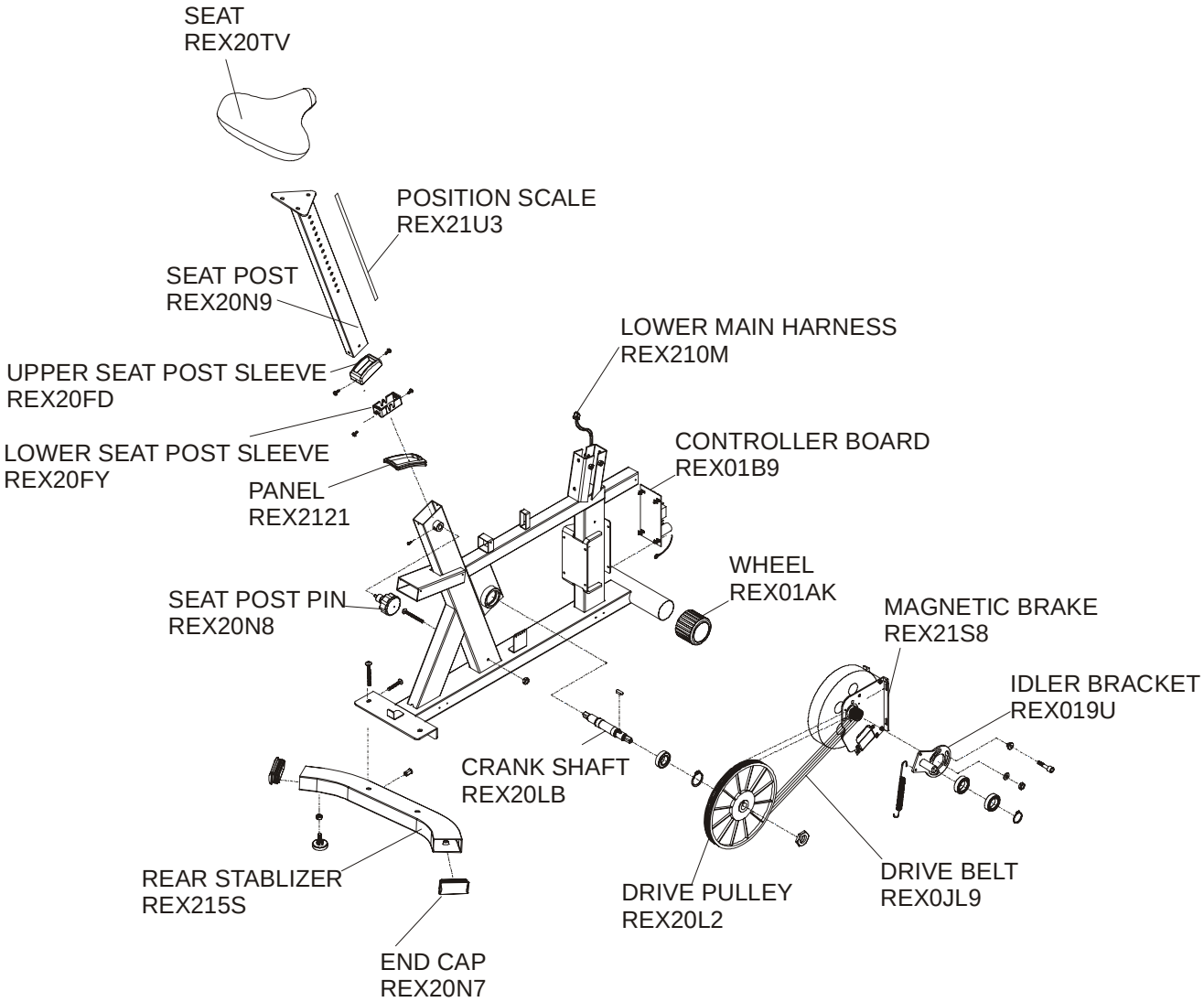
SEAT
REX20TV
POSITION SCALE
REX21U3
SEAT POST
REX20N9
LOWER MAIN HARNESS
REX210M
UPPER SEAT POST SLEEVE
REX20FD
LOWER SEAT POST SLEEVE
REX20FY
CONTROLLER BOARD
REX01B9
PANEL
REX2121
WHEEL
REX01AK
SEAT POST PIN
REX20N8
MAGNETIC BRAKE
REX21S8
IDLER BRACKET
REX019U
CRANK SHAFT
REX20LB
REAR STABLIZER
REX215S
DRIVE PULLEY
REX20L2
DRIVE BELT
REX0JL9
END CAP
REX20N7

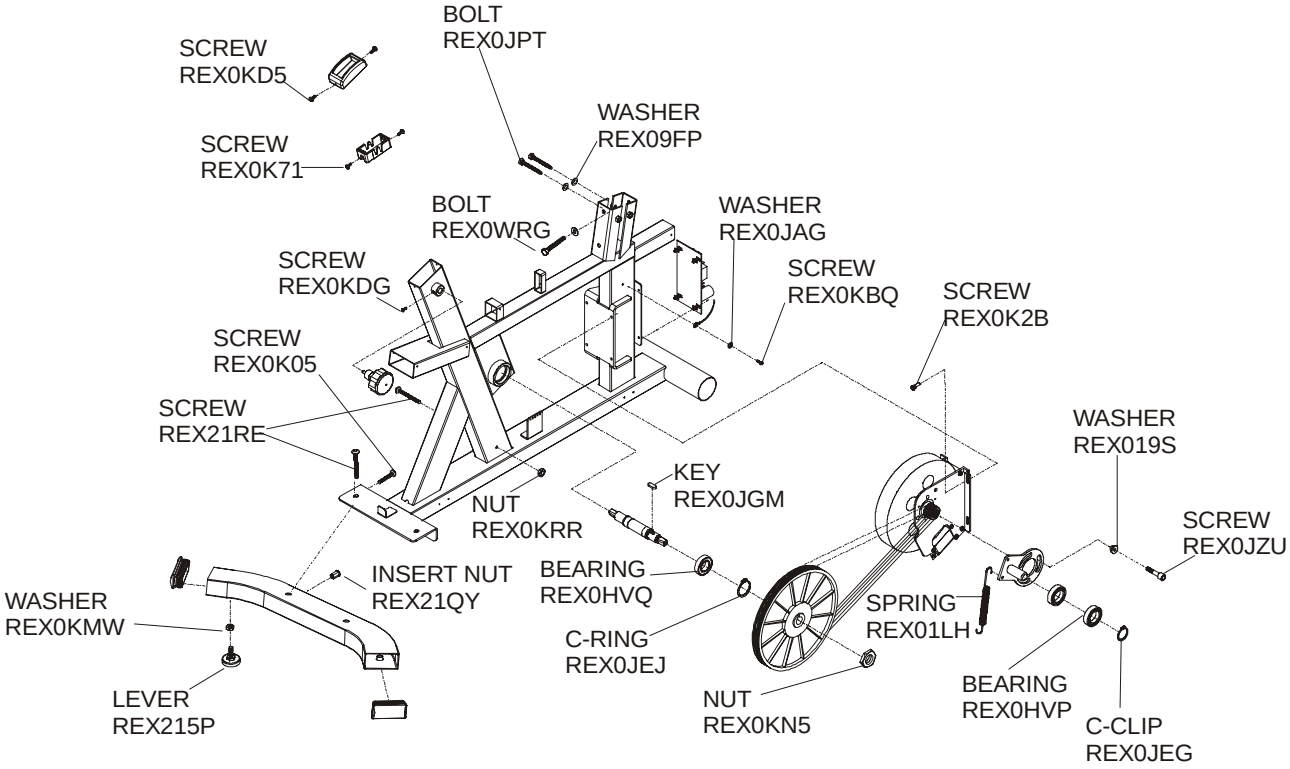
SCREW
REX0KD5
SCREW
REX0K71
BOLT
REX0JPT
WASHER
REX09FP
BOLT
REX0WRG
WASHER
REX0JAG
SCREW
REX0KDG
SCREW
REX0KBQ
SCREW
REX0K2B
SCREW
REX0K05
SCREW
REX21RE
WASHER
REX019S
KEY
REX0JGM
NUT
REX0KRR
SCREW
REX0JZU
INSERT NUT
REX21QY
BEARING
REX0HVQ
WASHER
REX0KMW
SPRING
REX01LH
C-RING
REX0JEJ
BEARING
REX0HVP
LEVER
REX215P
NUT
REX0KN5
C-CLIP
REX0JEG